ROD & CUSTOM
Motorsports
INCORPORATED

RC-106K

O.E. Style
Spring Suspension Kit
Instruction Package

NOTE...

- PLEASE READ ALL INSTRUCTIONS INCLUDED WITHIN THIS PACKAGE.
- IF AFTER READING YOU STILL NEED ASSISTANCE PLEASE CALL THE TECH LINE AT 843-629-1273.

SHIPPING DAMAGES

- Damaged or Open Packages must be reported to UPS by YOU @ 1-800-742-5877.
- All Claims for missing or damaged parts must be reported to Rod & Custom Motorsports within 7 days of receipt of order. Rod & Custom uses the UPS delivery date according to our UPS computer.
- Open ALL boxes and inventory your shipment immediately upon receipt. Check for all small items. Rod & Custom uses a 3 point checking system to assure all items are shipped accurately.

30 DAY RETURN POLICY

1. Rod & Custom will only accept merchandise for return or exchange provided it is returned within 30 days of purchase. Customer is responsible for shipping.
2. Merchandise is NOT eligible for return if any attempt has been made to install the part(s). Therefore, if the part or parts have been painted, drilled, cut/torched or bent, those items will not be accepted for return.
3. You must provide a copy of your invoice and provide instructions on what you would like done with returned parts. A Rod & Custom Return Authorization number is necessary with ALL returned items.
4. Special order and electrical items are NOT returnable.
5. All items ACCEPTED for return are subject to a 15% restocking fee.

LIABILITY NOTICE

Rod & Custom Motorsports, it's Dealers or Agents shall not be liable, in any way, for any damage, loss, injury, or other claims resulting from the use or misuse or inability to use any of our products. Buyer or user assumes liability of any kind connected with the use and/or application of our products. The foregoing is made in lieu of warranties, expressed or implied. Rod & Custom Motorsports' sole responsibility shall be to replace whatever parts prove to be defective.

PLEASE NOTE THE FOLLOWING:

A disc brake master cylinder and proportioning valve is required. We RECOMMEND a dual cylinder with a booster.

WARNING; You must use the complete bearings that we provide. The factory installed races in the rotors could be incompatible! If you do not, a bearing failure could occur.

It is NOT necessary to remove the front fenders, bumpers or engine to install this kit. It makes the job easier to do but is not a necessity.

Be sure to install rack and put pan on engine to set motor mounts. The best time to set the motor mounts is before you install the repair panels.

You may need to file the caliper brackets a small amount to make sure the calipers move freely.

Installation Instructions

1. Please note that the DVD supplied with this kit is a general example of a typical installation. Use ONLY these written instructions for detailed directions and information

2. Support car on jack stands in a level position.

3. Establish the suspension center line by referencing the frame rail drawing on the following page. Mark/scribe the outside of the frame rails with this line. Always work from the center line.

4. Remove all of the old suspension and steering gear at this time.

5. Measure the length of the Rod & Custom's crossmember mounting bracket (indicated below) and transfer this measurement to your frame rail. Half this measurement goes on each side of the previously determined suspension center line.

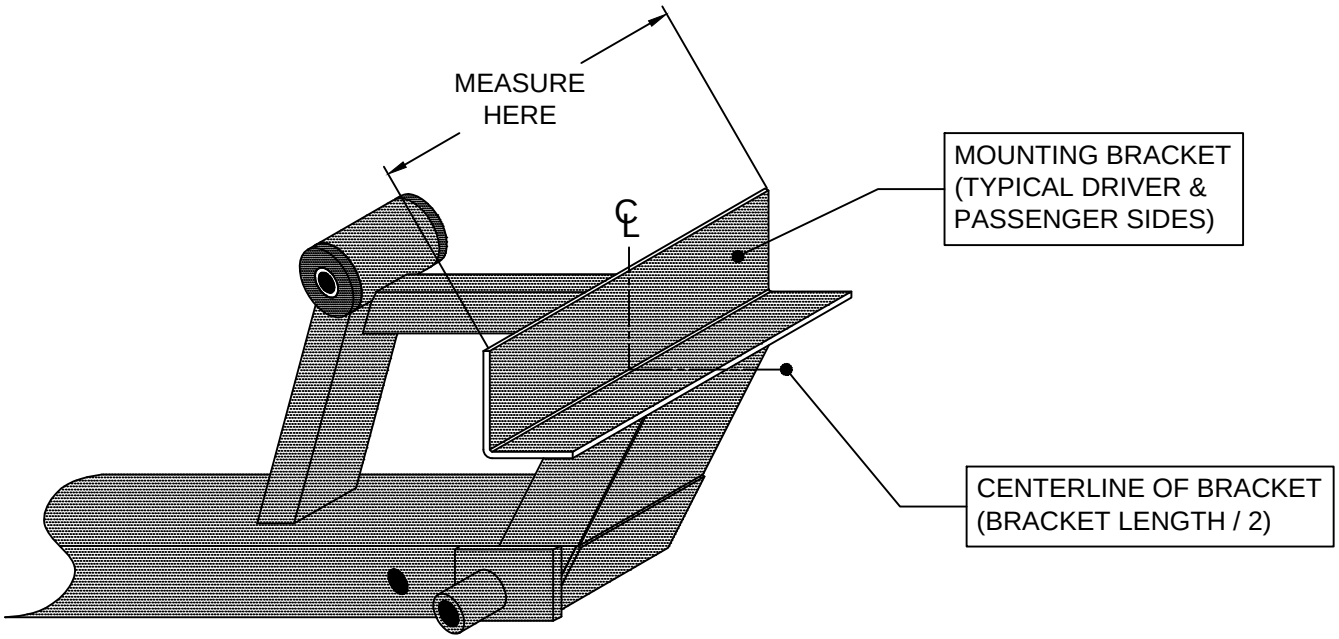

(Figure A)

6. Mark around the shock towers where you want to cut.

7. Double check to make sure everything is measured correctly and secured properly before the next step.

8. Now is the time to cut out the shock towers. A plasma torch is recommended but you can use what you have available such as acetylene torch, jigsaw, hacksaw, etc. Grind and clean your finished cuts. You will also need to cut the lip off the outside of the frame rails for a proper fit.

9. Take the new crossmember and block it up in place. (Figure B) Make sure it is square to the frame. It will be if your center line is correct. Now tack weld crossmember in place. Locate the 2 spring pockets and align them with the crossmember brackets. These are marked left (driver side) and right (passenger side). The high side (see figure C) always goes towards the front (except 1962-65 Fairlanes). 62-65 Fairlanes spring pockets do not require this high side because 4 degrees of anti-dive was built into the frame rails by the manufacturer.

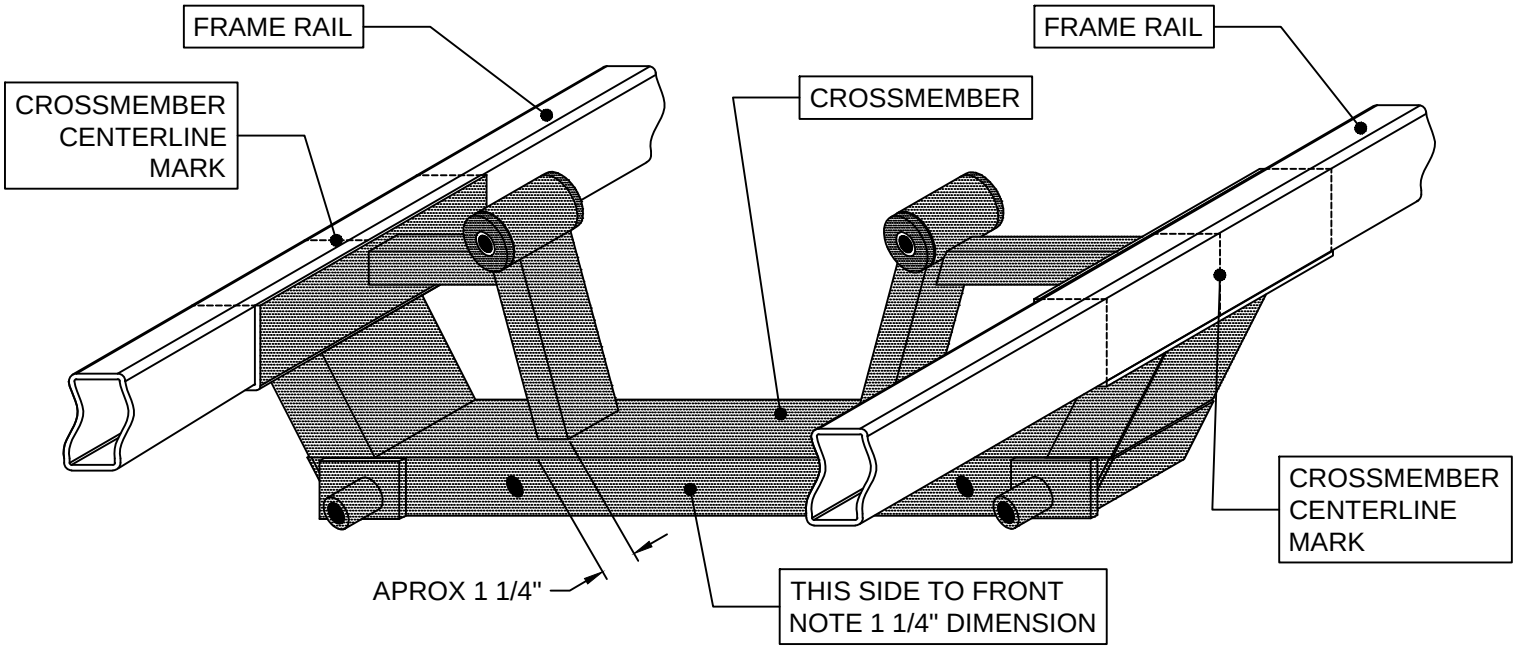

(Figure B)

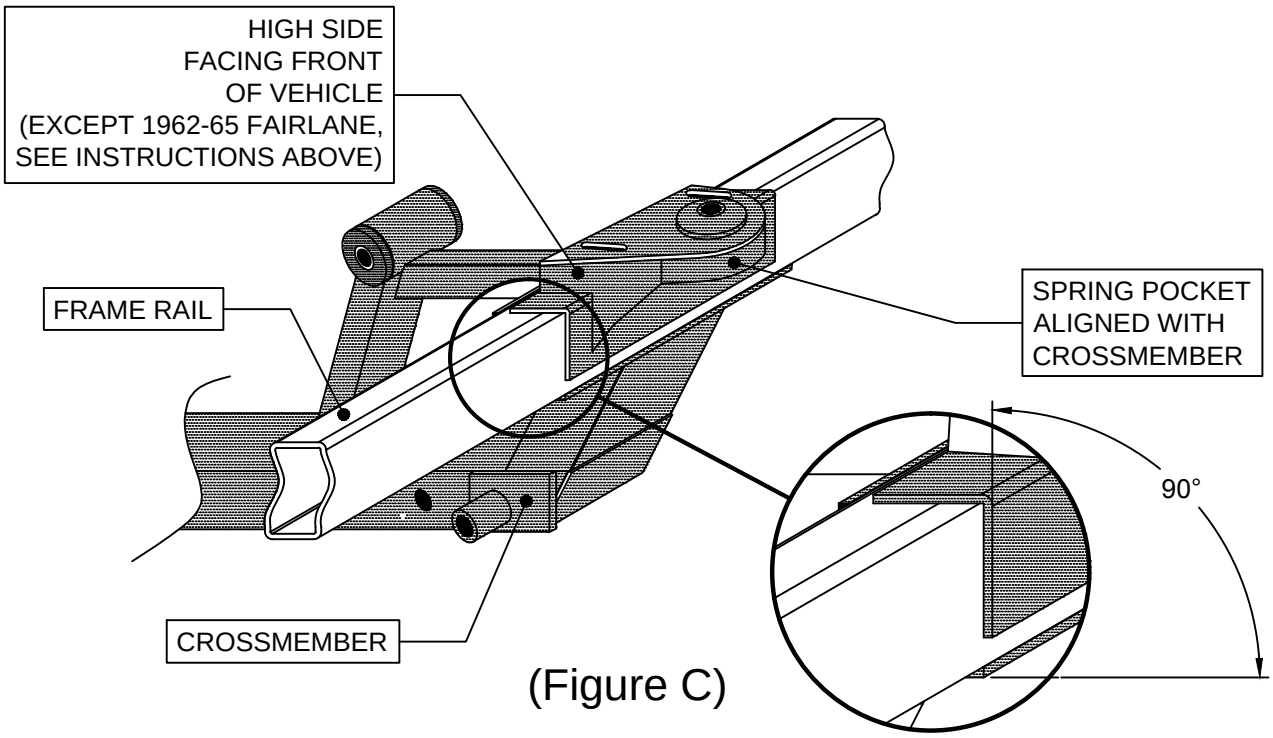

(Figure C)

INSTALLATION TIP

Please Note… In addition, we have found that some frame rails have slightly twisted with age or possibly damaged slightly by an accident in the past. A straight edge laid across the tops of the spring pocket angles can be used to verify that the spring pockets are parallel to each other. Keeping the spring pockets parallel and square to the Rod & Custom crossmember is important in keeping the new suspension geometry correct. Refer to Figure D. Make sure all is correct and weld in completely. We recommend that all welding be done by a certified welder. We DO NOT accept responsibility for the workmanship involved in installing this system.

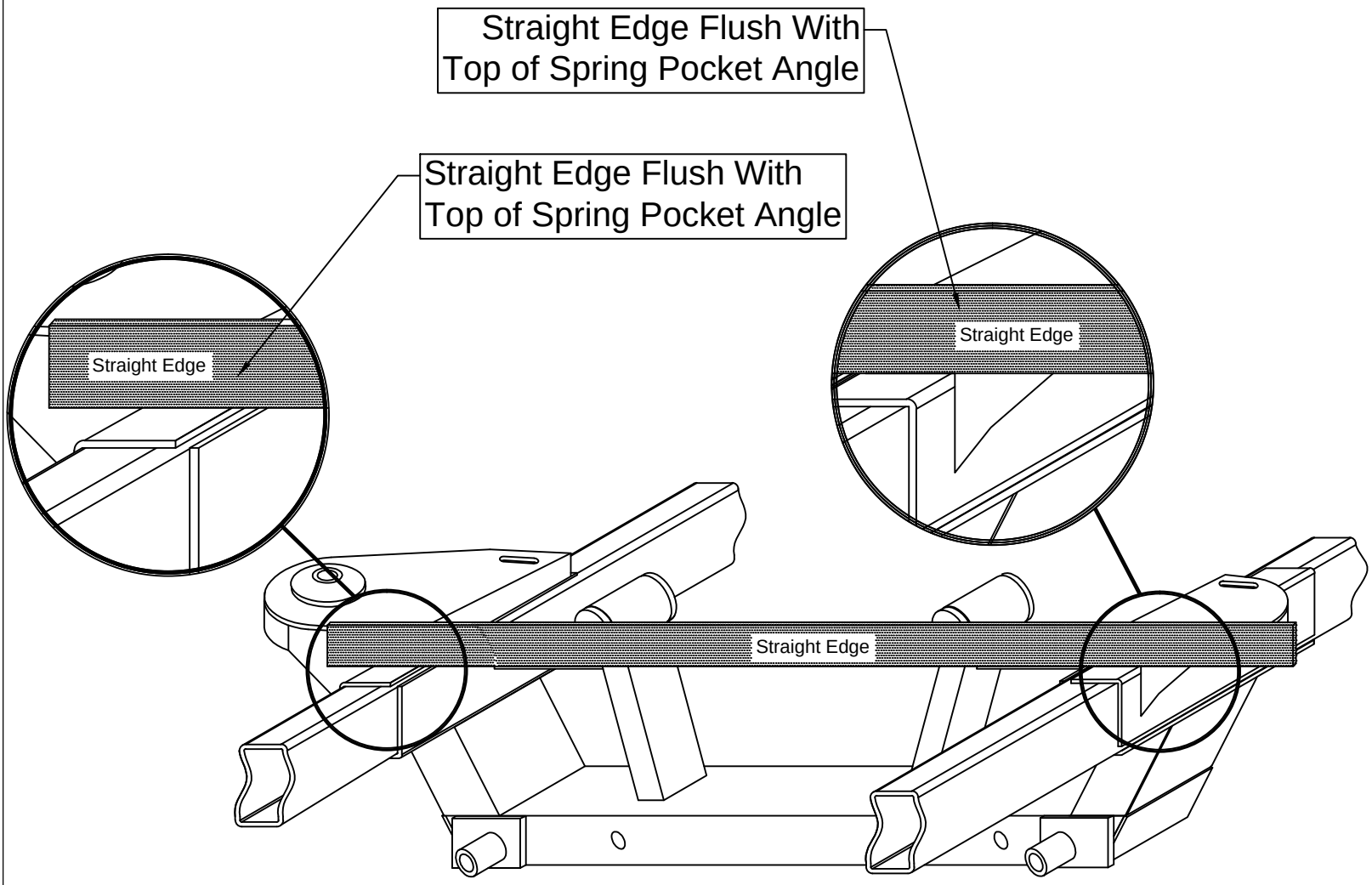

(Figure D)

(IF THE MOTOR MOUNTS ARE ALREADY INSTALLED ON YOUR CROSS MEMBER YOU MAY SKIP PARAGRAPH 10)

10. To install motor mounts you must install the engine and transmission. Drop assembly down over the crossmember with the rack installed. Set to proper height and center between the frame rails. If you have the frame level, you can use a level on the intake carburetor base to set the height. The engine should have an approximate 4 degree slope to the rear. Bolt the adapters to the block and fit the mounts between the engine and crossmember. Use the ¾" tubes to sidebrace the mounts. The carb base should be parallel to the frame rails with the block sloping approximately 4 degrees to the rear. Note; the big block kit is not assembled. Bolt the plate to the block. Take the stands with the mounts welded to them and mount the 2" x 2" tabs with the bolts provided. Tighten the bolts just snug. Fit the assembly to the plate and fit down the crossmember. Be sure you have the rack bolted on during this step so you can check for interference. Note; the transmission mount might have to be moved a small amount on some applications.

11. Temporarily install the upper control arms and fit the shock tower repair panels. Now spot weld, solid weld or bolt the panels into place.

12. Mount the sway bar by first sliding the U shaped brackets with bushings installed over ends of sway bar. Bolt sway bar brackets to the corresponding brackets welded to the frame rails. Leave bolts slightly loose to allow for some movement. With lower A-arm in horizontal position, install sway bar link components as shown in (Figure E) on page 6. Once links are assembled tighten 3/8 nylock until ¼" of bolt thread is exposed. Do this for both sides. If sway bar links are not straight up and down shift sway bar until this is achieved. Fully tighten the bolts which attach the sway bar bracket to the frame rail mount.

13. Mount the rack and the steering column so that you can make up the steering shaft. You do this by installing a U joint on the rack and on the column. Measure the distance between the joints and add 1 ¾" to that length. This is the overall length the new shaft will be cut to. Slip 7/8" into each U joint. Tighten set screw and nut. The bottom of your steering column will need to be modified for a joint. Different cars require different modifications. Rod & Custom can do this modification for a reasonable fee. Also refer to the rack bushing note below. When installing rack, ONLY wrench tighten attaching bolts. DO NOT TORQUE.

14. Bolt the complete system together. Be sure to use anti-seize compound on the lower A-arm bolts and tighten completely but DO NOT TORQUE. Install your engine. Fit your motor mounts as required. Make up power steering hoses if applicable and install. Make up brake line connections. Everything should be fitted at this time. Disassemble, paint and make final installation.

If Bushings are not already Installed in rack...

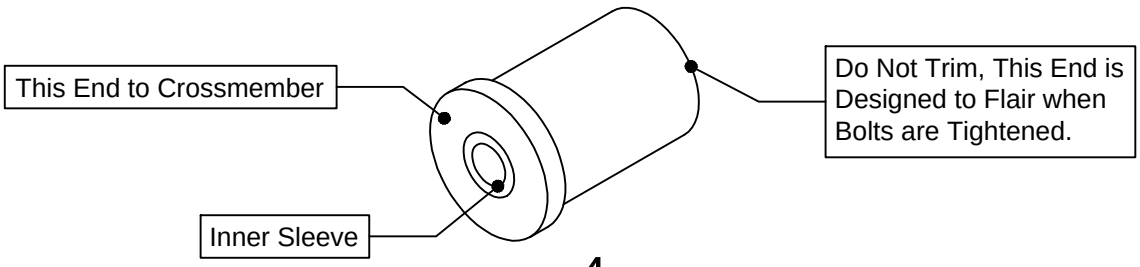

(Figure E)

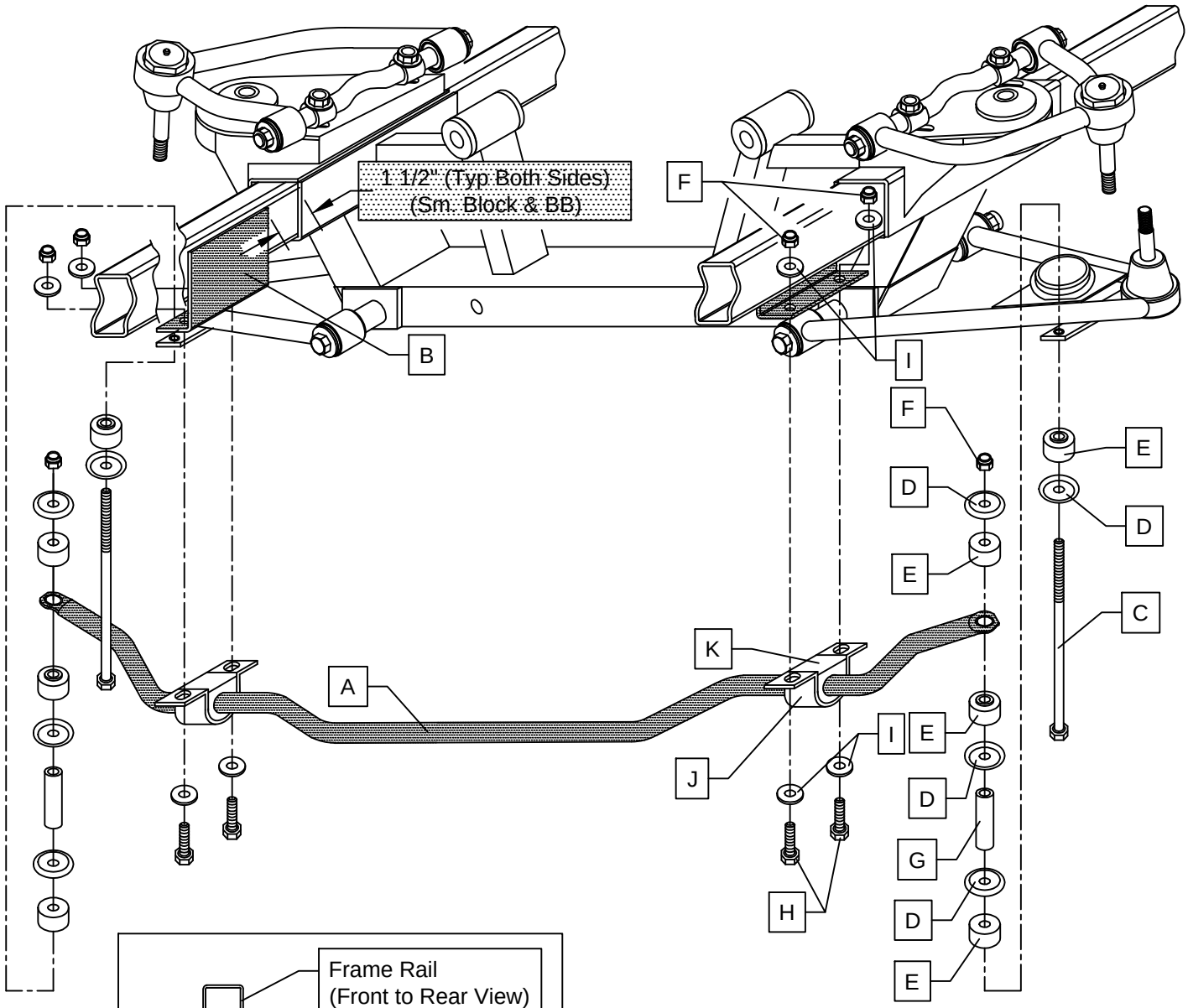

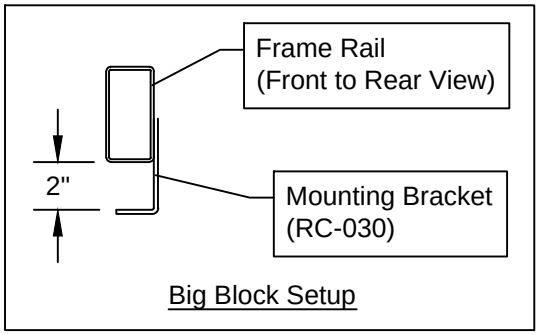

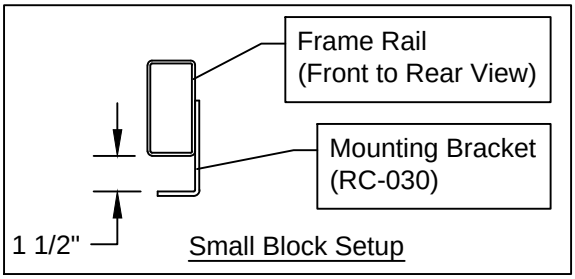

PART	DESCRIPTION	R&C PART #	QUANTITY	
A	SWAY BAR	VARIES	1	NOTE PART # ON BOX
B	SWAY BAR BRACKET	RC-030	2	WELDS TO FRAME RAILS
C	BOLT	————	2	3/8 - 16 X 7 LONG
D	CUP WASHER	PRO-3	8	SWAY BAR LINK
E	BUSHING	PRO-2	8	END LINK
F	NYLOCK	————	6	3/8 - 16
G	SLEEVE	PRO-1	2	END LINK, 2 5/8 LONG
H	BOLT	————	4	3/8 - 16 X 1 LONG (GRADE 8)
I	WASHER	————	4	3/8 FLAT
J	BRACKET	PRO-4	2	SWAY BAR MOUNTING BRACKET
K	BUSHING	PRO-5	2	SWAY BAR MOUNTING BUSHING

Oil Filter___ Motorcraft FL300 or equal (short filter). Some applications of the long filter can be used.

You must use a double sump oil pan to clear rack and crossmember properly.
RECOMMENDED OIL PANS TO MAKE THIS CONVERSION EASY

RC-161 (for 289-302-5.0) (Ford Double Hump 5 Quart Pan)

RC-164 (for 289-302-5.0) (Special Double Hump 7 Quart Pan)

RC-162 (for 351-W) (Ford Double Hump 5 Quart Pan)

RC-165 (for 351-W) (Special Double Hump 7 Quart Pan)

RC-166 (for 351-C) (Special Double Hump 7 Quart Pan)

RC-167 (for 390-427-428) (Special Double Hump 7 Quart Pan)

RC-163 (for 429-460) (Ford Double Hump 5 Quart Pan)

RC-168 (for 429-460) (Special Double Hump 7 Quart Pan)

If in need of assistance please call. No question is too small

(Figure F)

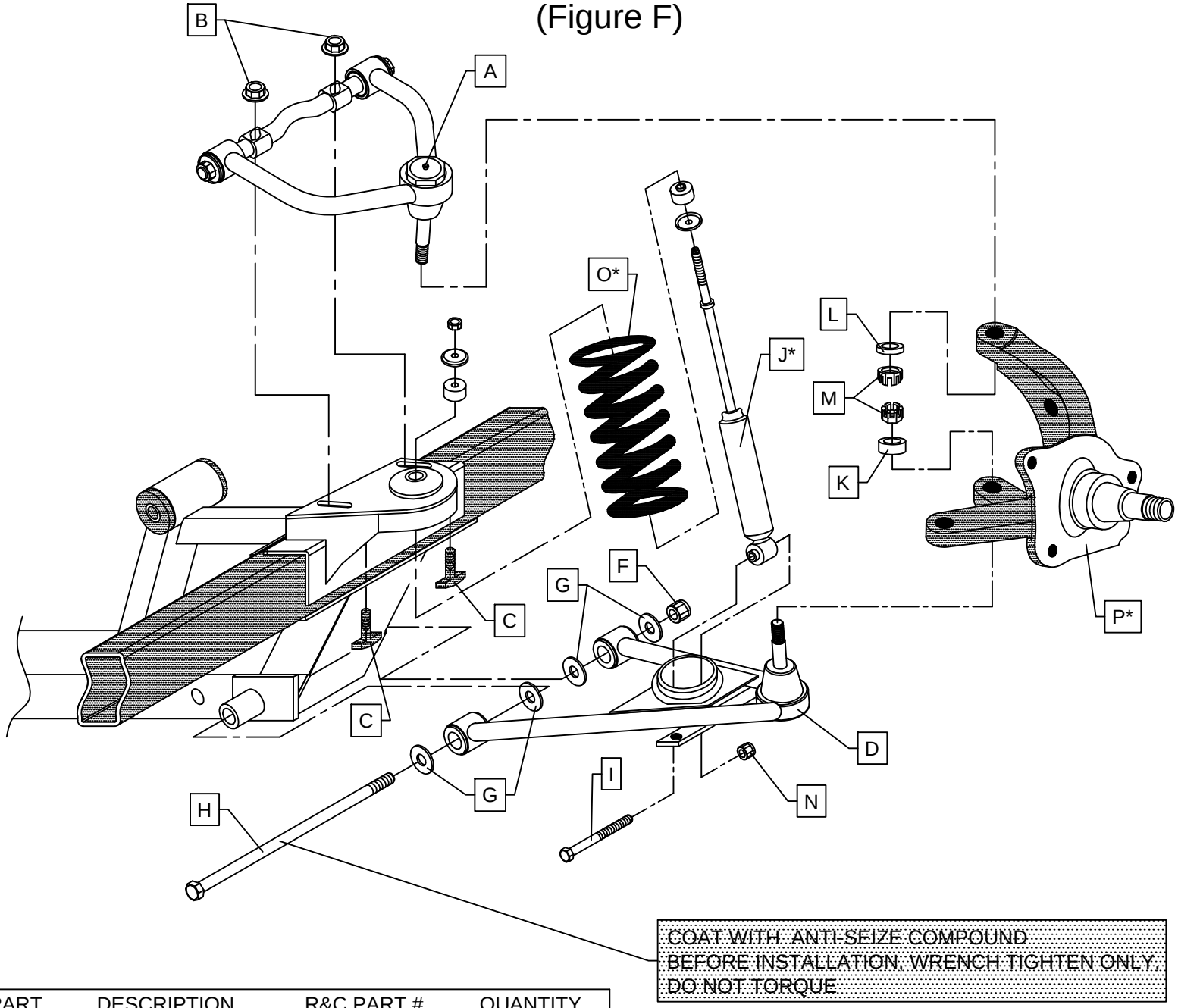

PART	DESCRIPTION	R&C PART #	QUANTITY		
A	UPPER A-ARM	W-RC-410	2	WITH BUSHINGS & BALL JOINTS INSTALLED	
B	T-BOLT NUTS	————	4	BAGGED TOGETHER	
C	T-BOLTS	————	4		
D	LOWER A-ARM	W-RC-411L	1	DRIVER SIDE LOWER A-ARM	
E	LOWER A-ARM	W-RC-411R	1	PASSENGER SIDE LOWER A-ARM (NOT SHOWN)	
F	NYLOCK	————	2	1/2 - 13 (WRENCH TIGHTEN ONLY - DO NOT TORQUE)	
G	FLAT WASHER	————	8	1/2	
H	BOLT	————	2	1/2 - 13 X 12 LONG (GRADE 8) (COAT WITH ANTI-SEIZE)	
I	BOLT	————	2	7/16 - 20 X 3 1/4 LONG (GRADE 8)	
J*	SHOCK ABSORBER	VARIES	2	MONROE 32134 (SB) OR MONROE 32250 (BB)	
K	SPACER, BALL JOINT	RC-037	2	LOWER BALL JOINT (3/8 THICK)	
L	SPACER, BALL JOINT	RC-119	2	UPPER BALL JOINT (3/16 THICK)	
M	CASTLE NUT	————	2	INCLUDED WITH BALL JOINT	
N	NUT	————	2	7/16 X 20 NYLOCK	
O*	COIL SPRING	VARIES	2	DETERMINED BY RCM AT TIME OF ORDER	
P*	SPINDEL	RC-124	PAIR	STOCK HEIGHT (LEFT & RIGHT)	Customer Choice at Time of Order
P*	SPINDEL	RC-125	PAIR	2" DROP (LEFT & RIGHT)	

Front End Alignment Specs

Rod & Custom Motorsports MII Suspension Systems

Power Steering Specs:
1/4° Negative Camber
2° to 3° Positive Caster
1/8" Toe-In

Manual Steering Specs:
1/4° Negative Camber
1° to 1 1/2° Positive Caster
1/8" Toe-In

Definitions:

Camber is the inward or outward leaning of the top of the spindle when viewed from the front of the car.

Positive camber will occur when the top of the spindle leans outward toward the fender.
Negative camber will occur when the top of the spindle leans inward toward the engine.

Caster is the forward or rearward tilt of the top of the spindle centerline when viewed from the side of the car.

Positive camber will occur when the top of the spindle is leaning to the rear.
Negative caster will occur when the top of the spindle is leaning to the front.

Toe Setting is the straight line setting of the front wheels in relation to each other.

Toe-In will occur when the front sides of the tires are closer than the rear .
Toe-Out will occur when the rear sides of the tires are closer than the front.

Wheels & Tires Notes:

* For optimum tire clearance we STRONGLY recommend no wider than a 7 inch Wheel.
* 7 inch wide wheels need 4 to 4 1/2 inch backspacing.
* Some 14 inch wheels MAY work, some WILL NOT.
* 15, 16 & 17 inch tall wheels are acceptable.
* 8 inch wheels are possible BUT you will need to determine your backspacing DEAD ON!

QA1 Coilover Notes

QA1 shocks have 18 damping settings. There are 6 clicks per revolution and there are 3 revolutions. When the knob is set fully counter clockwise it is on the softest setting. Start your adjustment from the softest setting. Recommended base settings to begin with are as follows:

* 2 - 8 clicks for a nice ride and handling;
* 8-12 clicks for a firm ride and improved handling;
* 13 + clicks for more aggressive handling;

NOTE: DO NOT FORCE THE ADJUSTER KNOB. DO NOT USE PLIERS OR ANY OTHER TOOLS ON THE PISTON ROD OR THE ADJUSTER KNOB. DO NOT EXCEED 18 CLICKS UNDER ANY CIRCUMSTANCES. THIS COULD DAMAGE THE SHOCK AND CAUSE IT NOT TO ADJUST. THIS WILL VOID ALL WARRANTIES. DO NOT USE THE SHOCK ABSORBER AS SUSPENSION.

UPPER COILOVER MOUNT IS ADJUSTABLE FOR SETTING RIDE HEIGHT.

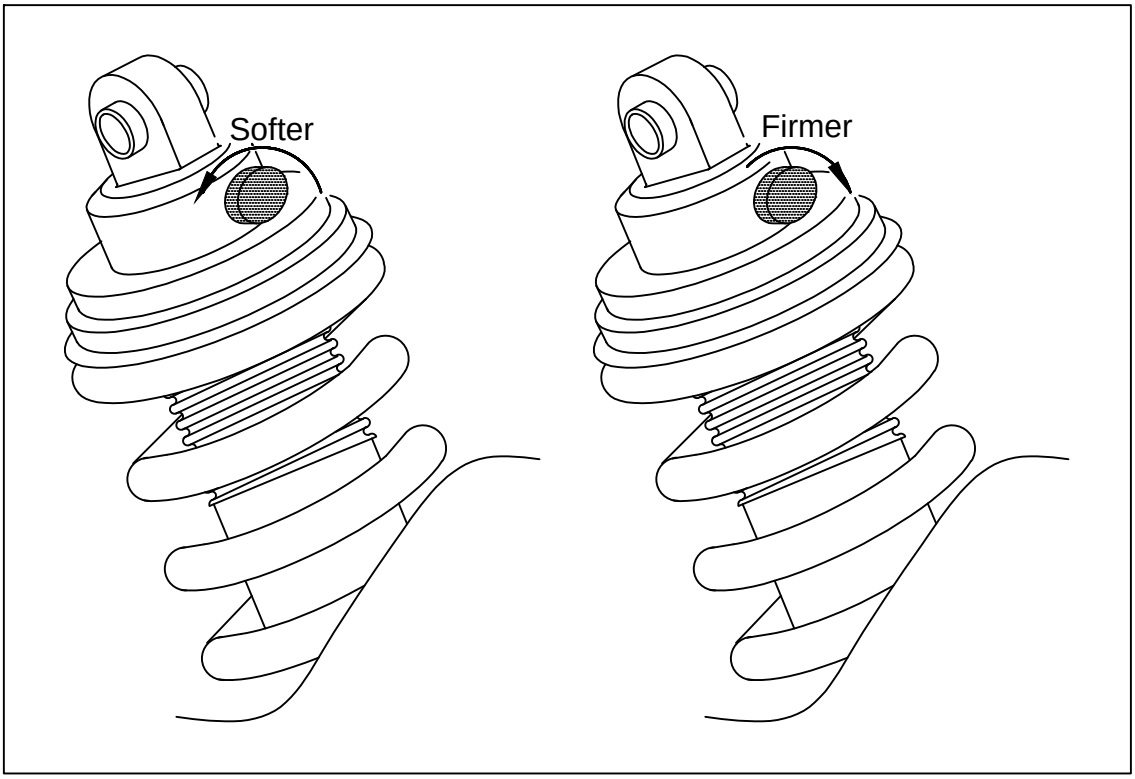

For additional information on your new QA1 Coilover Shocks, Please refer to the instruction/spec sheet included in each QA1 box.

WARNING

BE EXTREEMLY CAREFUL WHEN TRANSPORTING (HAULING) YOUR VEHICLE. DAMAGE TO THE FRONT SUSPENSION OCCUR IF A WINCH IS USED AND THE FRONT OF THE VEHICLE IS PULLED DOWN HARD. THIS COMMONLY HAPPENS WHEN A ROLLBACK IS USED.